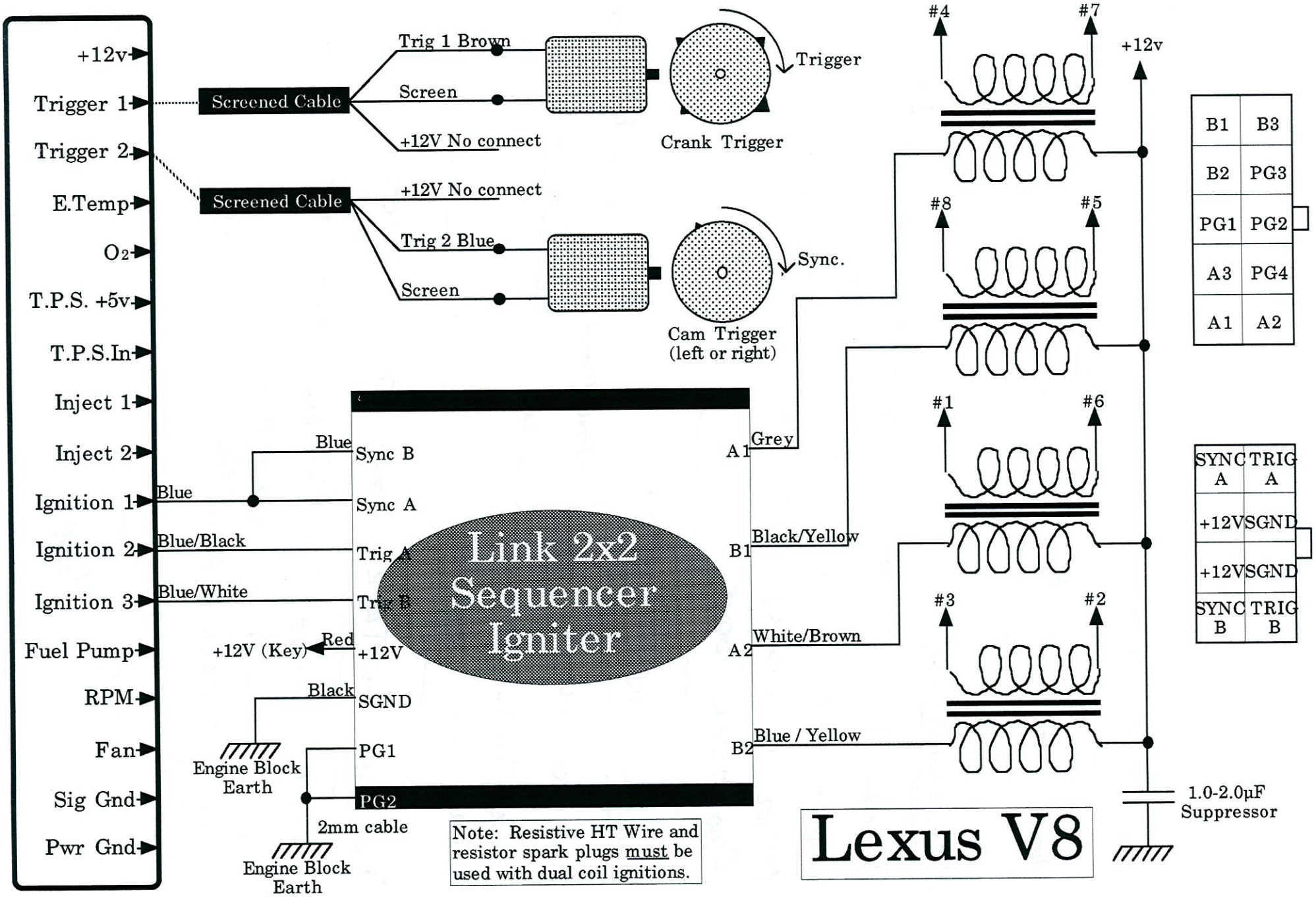

Note: Resistive HT Wire and resistor spark plugs must be used with dual coil ignitions.

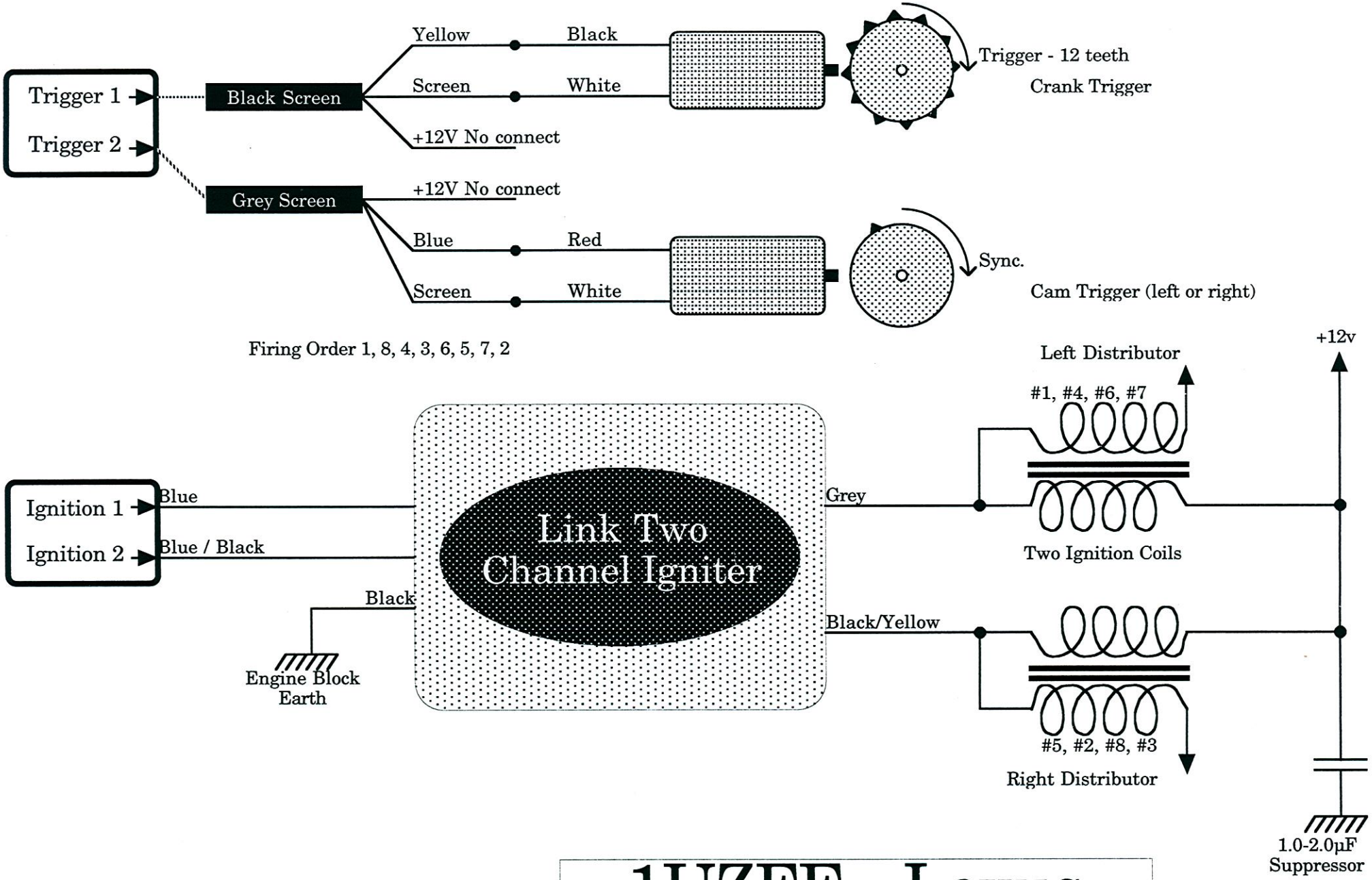
Trigger 1
Trigger 2
Black Screen
Yellow
Black
Screen
White
+12V No connect
Trigger - 12 teeth
Crank Trigger
Grey Screen
+12V No connect
Blue
Red
Screen
White
Sync.
Cam Trigger (left or right)
Firing Order 1, 8, 4, 3, 6, 5, 7, 2
+12v
Left Distributor
#1, #4, #6, #7
Ignition 1
Ignition 2
Blue
Blue / Black
Link Two
Channel Igniter
Grey
Two Ignition Coils
Black
Black/Yellow
Engine Block
Earth
#5, #2, #8, #3
Right Distributor
1.0-2.0µF
Suppressor

1UZFE - Lexus